TOUCHLESS TECHNOLOGY ACTIVATION SENSORS

MS09 SERIES

MAGIC SWITCH

Easy Installation

FEATURES

- Touchless technology is ideal for use in sterile environments (i.e. clean-rooms, healthcare facilities, food processing plants)
- Can be hidden from view by installing the microwave sensor behind non-metallic surfaces (i.e. mounted behind drywall)
- Variable adjustment of detection zone from 4 to 24 inches
- Water-resistant foam gasket provides increased reliability when exposed to water or cleaning products
- Low profile, beveled design reduces accidental damage

APPLICATIONS

- Sterile environments (clean-rooms, operating rooms, pharmaceutical, manufacturing, etc.)
- Healthcare facilities (hospitals, assisted living, elder care, etc.)
- Food processing plants (reduces cross-contamination)
- Wash down environments

The NEMA 4 rated MS09 utilizes microwave motion technology and the Doppler Radar effect. The MS09 detects moving objects such as a hand, cart or wheelchair. It is also not affected by stationary objects or changes in temperature.

How It Works

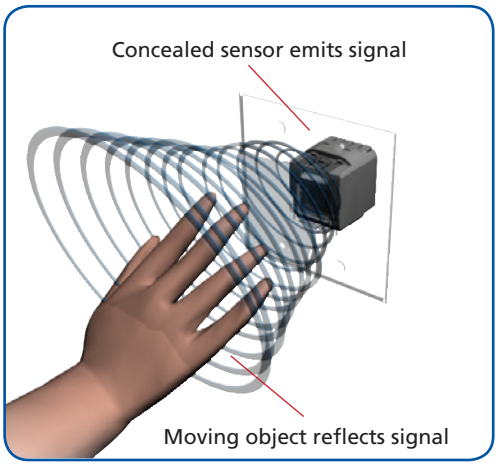

Components View

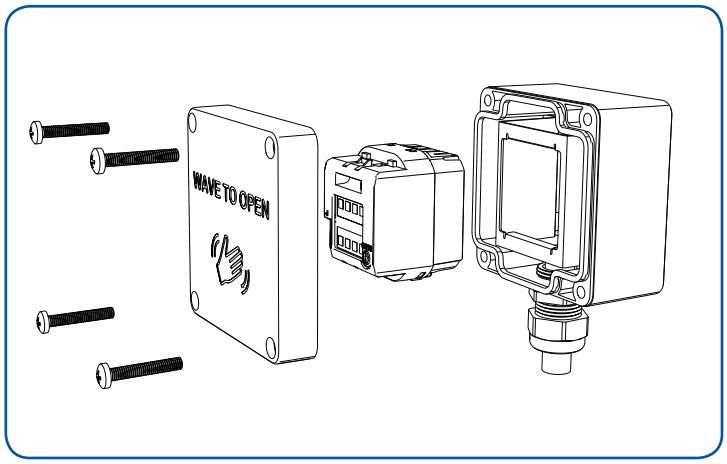

International Door Closers, Inc.

COPYRIGHT 2017 INTERNATIONAL DOOR CLOSERS, INC

West: 800-544-4422 • East: 800-225-6737
www.intldoorclosers.com

INDUSTRIAL HIGH SPEED ROLL-UP DOOR

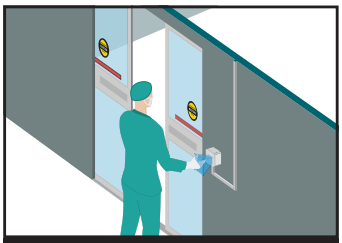

CLEAN ROOM DOORS

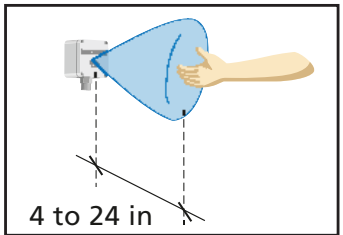

DETECTION ZONE

MS08 SERIES

MS21H SERIES

PANTHER SERIES

MS09 SERIES

10MS09TL
Wave To Open Text and Logo

10MS09L
Wave To Open Logo

TECHNICAL SPECIFICATIONS

Technology	K-Band Microwave Doppler Radar
Radiated Frequency	24.125 GHz
Transmitter Radiated Power	< 20 dBm EIRP
Radiated Power Density	< 5 mW/cm²
Detection Mode	Motion (bidirectional)
Detection Range	4 to 24 inches (adjustable)
Output	Relay with switch-over contact (free of potential)
Max. Voltage	60 VDC; 125 VAC
Max. Current	1 A (resistive)
Max. Switching Power	30 W (DC); 60 VA (AC)
Output Hold Time	0.5 s (in pulsed mode)
Supply Frequency	50 to 60 Hz
Supply Voltage	12 to 24 VAC ± 10% 12 to 24 VDC + 30%; – 10%
Power Consumption	< 1.5 W
Material / Colors	ASA, Nylon / White
Cable Type	Compatible with standard, 4-conductor low voltage cable *(not suppied)*
Temperature Range	–4°F to +131°F
Degree of Protection	NEMA 4
Certifications	EMC: 2004 / 108 / EC; FCC: G9B-MS08; IC: 4680A-MS08

Specifications are subject to change without prior notice.

DISCLAIMER This document as well as all other enclosed documents (quotation / specification / other) are provided «as is» without warranties of any kind, either expressed or implied, including but not limited to the implied warranties of merchantability, fitness for a particular purpose, or non-infringement. / Information is supplied upon the condition that the persons receiving it will make their own determination as to its suitability for their purposes prior to use. In no event will IDC be responsible for damages of any nature whatsoever resulting from the use of or reliance upon information from this document or the products to which the information refers. / IDC has the right without liability to change descriptions and specifications at any time. / Prices, shipping and availability are subject to change without prior notice.